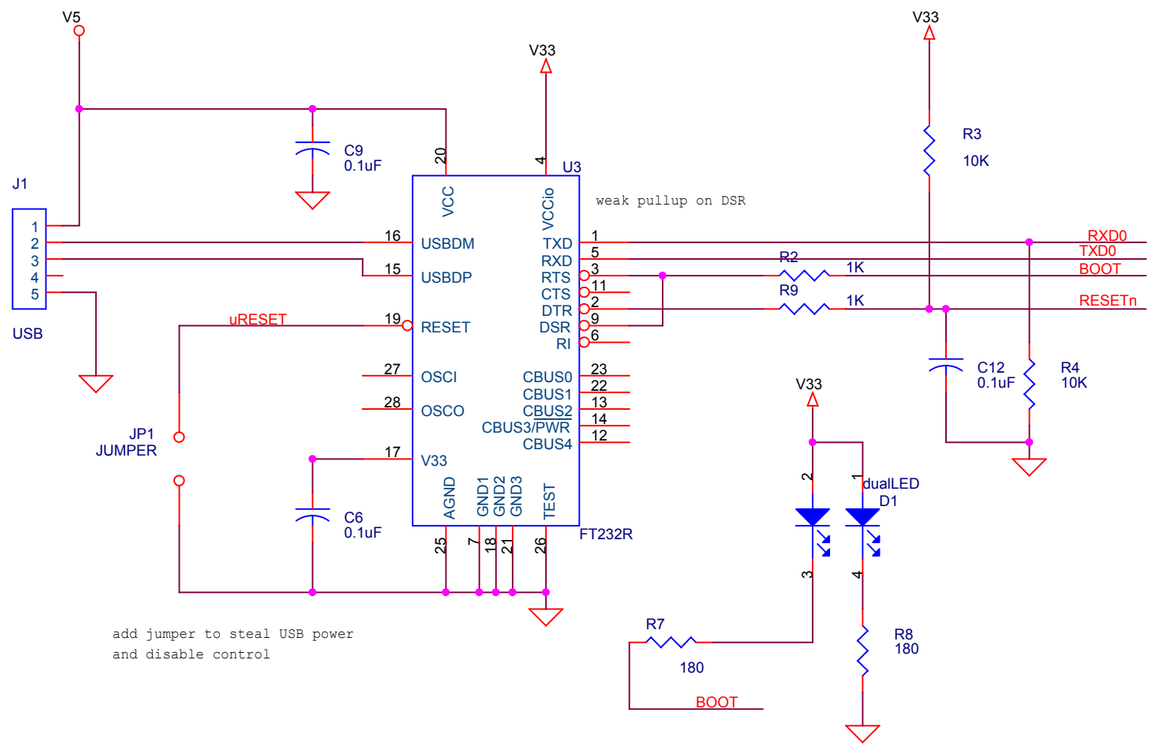

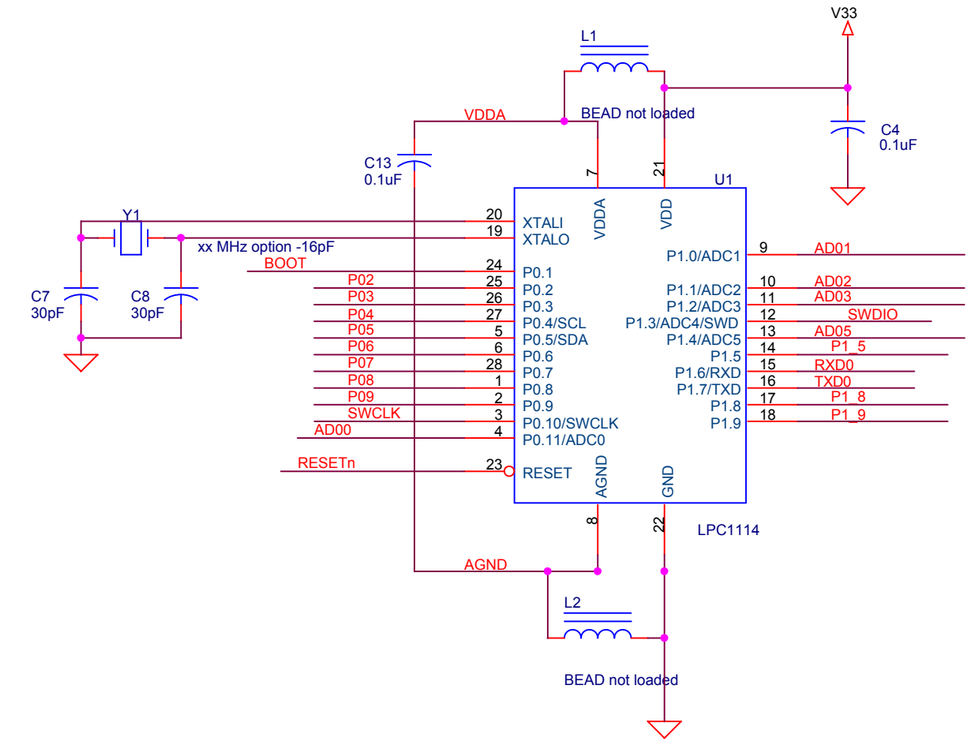

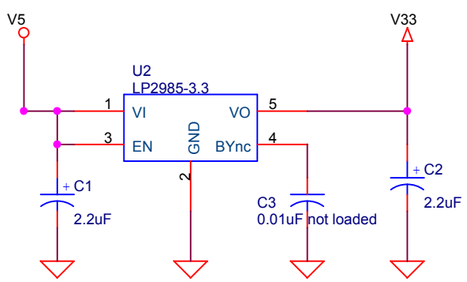

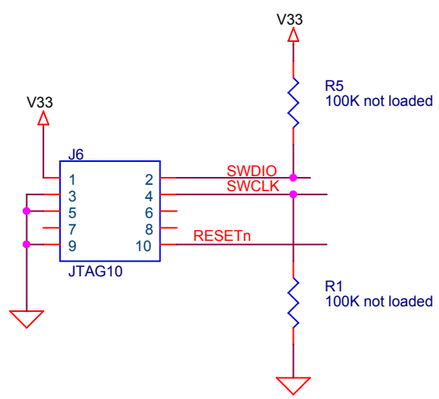

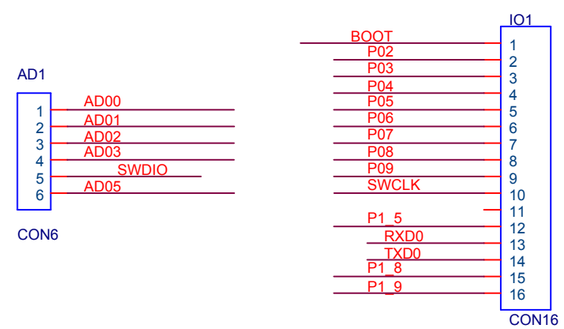

CORIDIUM™

Title	BCprogrammer	
Size B	Document Number {Doc}	Rev 1
Date: Thursday, March 15, 2012	Sheet 1 of 1	